Announcement

- Reminders
  - Wednesday's class will start at 12:00PM.
  - Summary of the chapter 11 was posted on website and was sent you by email. For the students, who needs hardcopy, please come to the front table.
- Homework
  - 12.9 (7th) or 12.10 (8th)

    12.17 (7th) or 12.18 (8th)

    12.22 (7th) or 12.24 (8th)

    12.25 (7th) or 12.27 (8th)

    12.36 (7th) or 12.38 (8th)
  - **Due, next Wednesday, 07/19/2006!**

Sample Problem 11.12

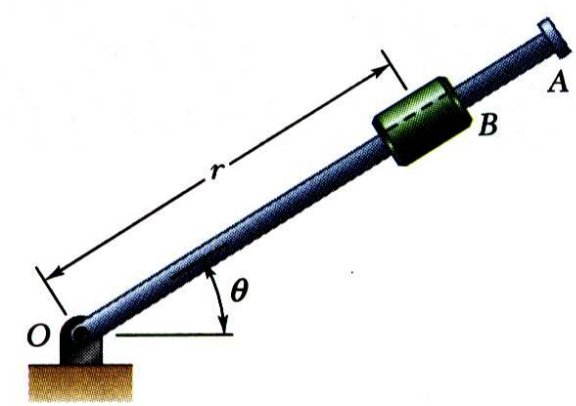

Rotation of the arm about O is defined by $\theta = 0.15t^2$ where θ is in radians and t in seconds. Collar B slides along the arm such that $r = 0.9 - 0.12t^2$ where r is in meters.

After the arm has rotated through 30°, determine *(a)* the total velocity of the collar, *(b)* the total acceleration of the collar, and *(c)* the relative acceleration of the collar with respect to the arm.

SOLUTION:

- Evaluate time t for $\theta = 30°$.
- Evaluate radial and angular positions, and first and second derivatives at time t.
- Calculate velocity and acceleration in cylindrical coordinates.
- Evaluate acceleration with respect to arm.

Review of last class and introduction of this class ---- Road Map

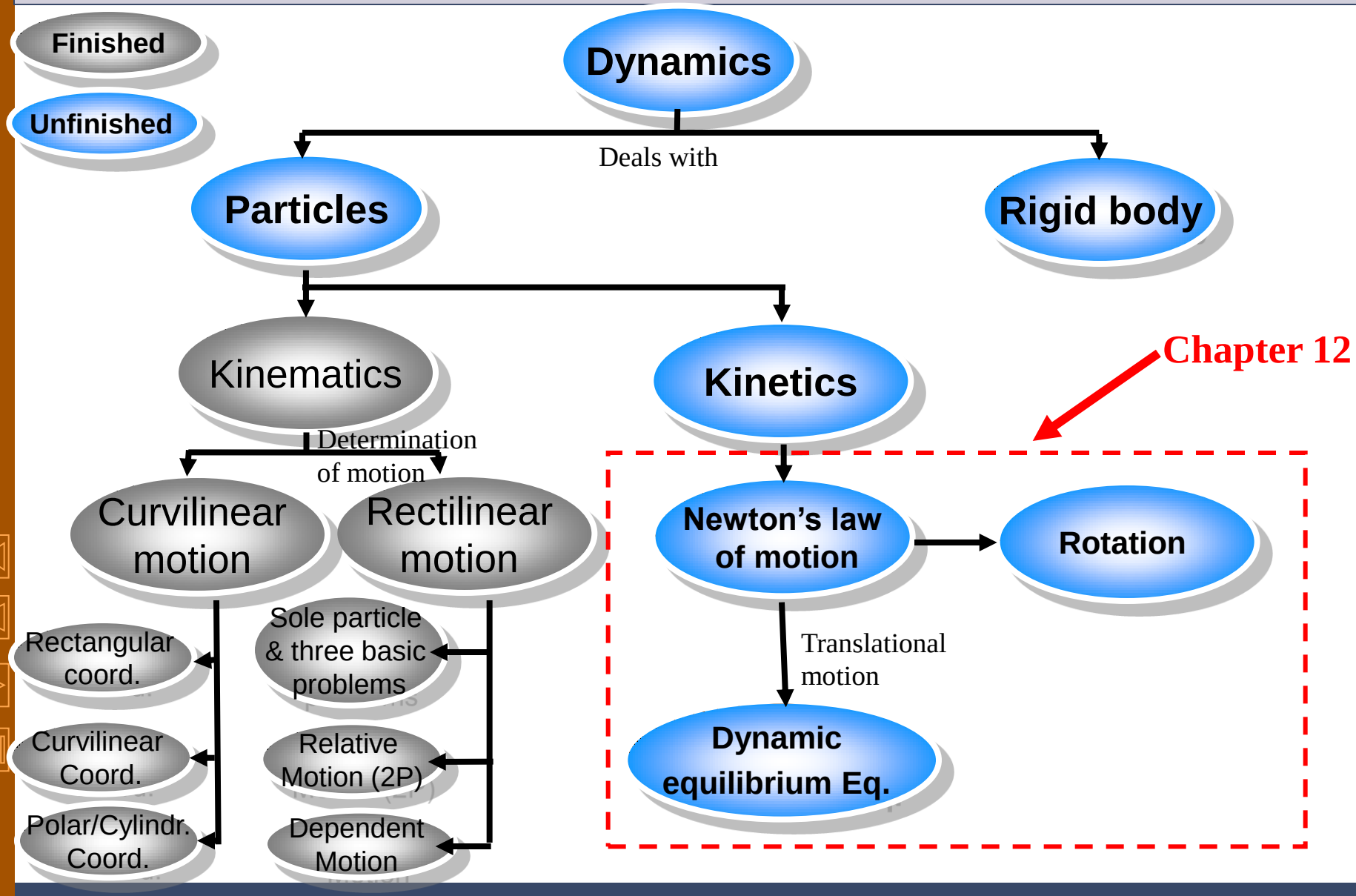

CHAPTER

11

VECTOR MECHANICS FOR ENGINEERS:

DYNAMICS

Ferdinand P. Beer

E. Russell Johnston, Jr.

Lecture Notes:

Dr. Gangyi Zhou

UC Irvine

Jul 10th, 2006

Kinetics of Particles

Part 2: Force method

Newton's Second Law of Motion ---moving objects with **constant** mass

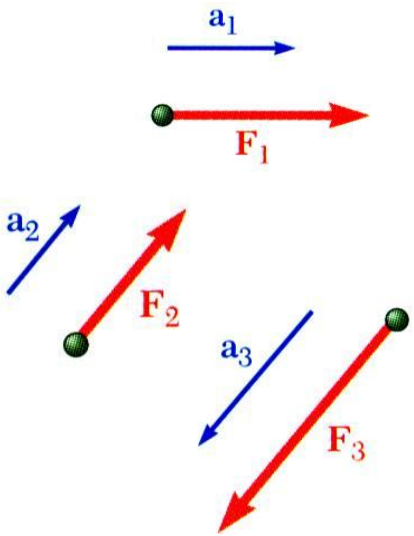

- *Newton's Second Law*: If the *resultant force* acting on a particle is not zero, the particle will have an acceleration *proportional to the magnitude of resultant* and in the *direction of the resultant*.
- When a particle of mass m is acted upon by a force $\mathbf{F}$, the acceleration of the particle must satisfy

$$\mathbf{F} = m\mathbf{a}$$ (Mathematic expression)

- Remarks: If force acting on particle is zero, particle will not accelerate, i.e., it will remain stationary or continue on a straight line at constant velocity.

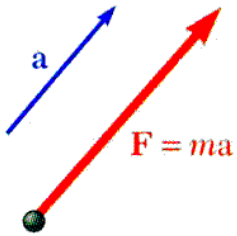

- **Caution:** Acceleration must be evaluated with respect to a *Newtonian frame of reference*, i.e., one that is not accelerating or rotating.

Newton's Second Law of Motion ---moving objects with **variable** mass

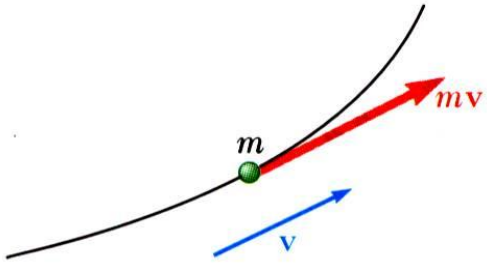

•Consider how Rocket launches:
(1) Rockets propel outwards high pressure gases;
(2) The mass of Rockets decreases
(3) Rockets are moving object with decreasing mass

- Replacing the acceleration by the derivative of the velocity yields

$$\sum \mathbf{F} = \frac{d}{dt}(m\mathbf{v}) = \frac{d\mathbf{L}}{dt}$$

$$\mathbf{L} = \text{linear momentum of the particle}$$

A general form

- *Linear Momentum Conservation Principle*:
  If the resultant force on a particle is zero, the linear momentum of the particle remains constant in both magnitude and direction.

Systems of Units

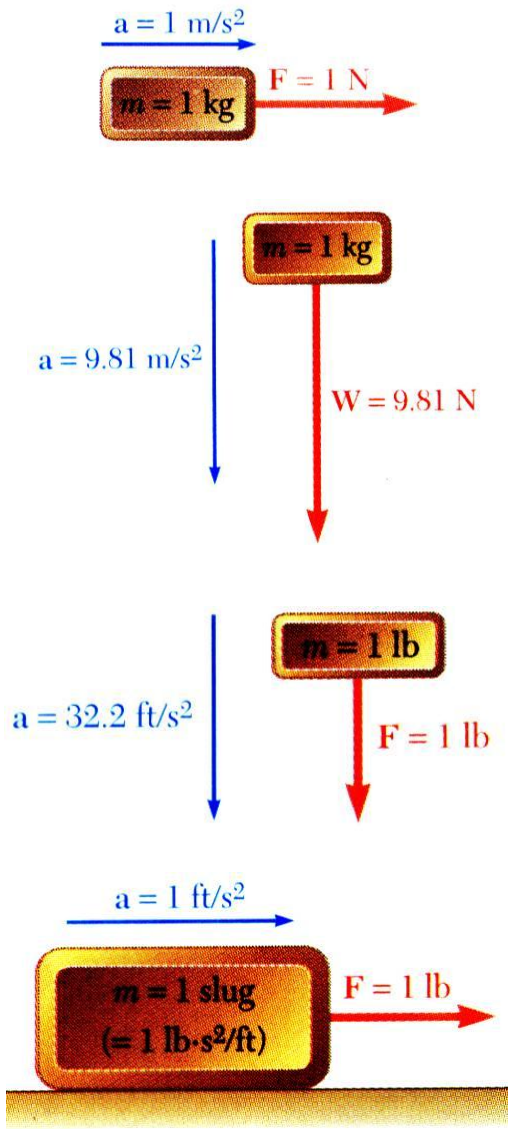

- Of the units for the four primary dimensions (force, mass, length, and time), three may be chosen arbitrarily. The fourth must be compatible with Newton's 2nd Law.

- *International System of Units* (SI Units): base units are the units of **length** (m), **mass** (kg), and **time** (second). The unit of force is derived,

$$1\,\mathrm{N} = (1\,\mathrm{kg})\left(1\frac{\mathrm{m}}{\mathrm{s}^2}\right) = 1\frac{\mathrm{kg}\cdot\mathrm{m}}{\mathrm{s}^2}$$

- *U.S. Customary Units*: base units are the units of **force** (lb), **length** (m), and **time** (second). The unit of mass is derived,

$$1\,\mathrm{lbm} = \frac{1\,\mathrm{lb}}{32.2\,\mathrm{ft}/\mathrm{s}^2} \qquad 1\,\mathrm{slug} = \frac{1\,\mathrm{lb}}{1\,\mathrm{ft}/\mathrm{s}^2} = 1\frac{\mathrm{lb}\cdot\mathrm{s}^2}{\mathrm{ft}}$$

Equations of Motion

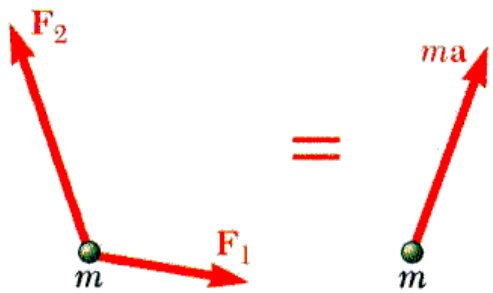

- Newton's second law provides

$$\sum \mathbf{F} = m\mathbf{a}$$

- Solution for particle motion is facilitated by resolving vector equation into scalar component equations, e.g., for rectangular components,

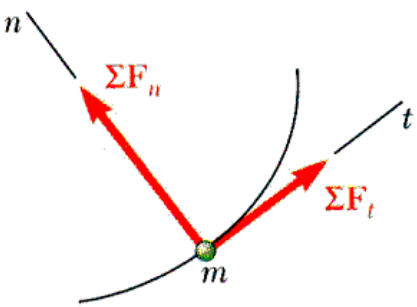

Rectangular Coord.

$$\sum\left(F_x\mathbf{i} + F_y\mathbf{j} + F_z\mathbf{k}\right) = m\left(a_x\mathbf{i} + a_y\mathbf{j} + a_z\mathbf{k}\right)$$

$$\sum F_x = ma_x \qquad \sum F_y = ma_y \qquad \sum F_z = ma_z$$

$$\sum F_x = m\frac{d^2x}{dt^2} \qquad \sum F_y = m\frac{d^2y}{dt^2} \qquad \sum F_z = m\frac{d^2z}{dt^2}$$

- For tangential and normal components,

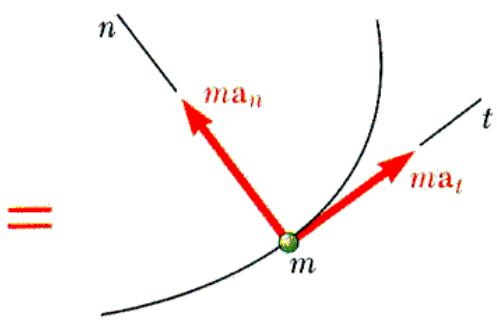

$$\sum F_t = ma_t \qquad \sum F_n = ma_n$$

$$\sum F_t = m\frac{dv}{dt} \qquad \sum F_n = m\frac{v^2}{\rho}$$

Curvilinear Coord.

Dynamic Equilibrium

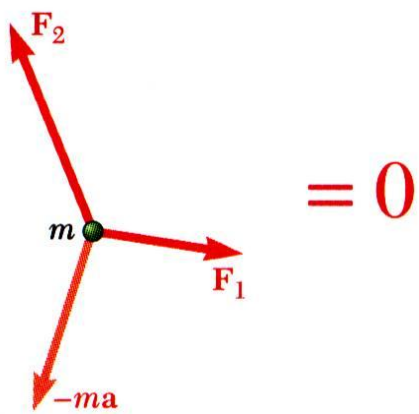

$= 0$

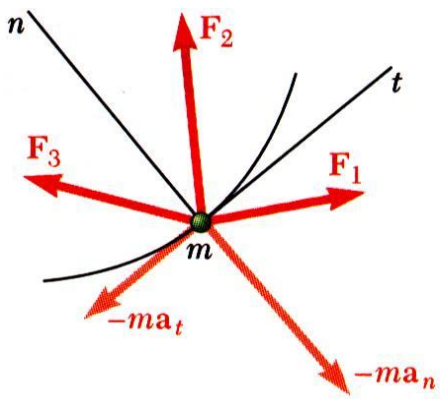

$= 0$

- Alternate expression of Newton's second law,

$$\sum \mathbf{F} - m\mathbf{a} = 0$$

$$-m\mathbf{a} \equiv \text{inertial vector}$$

A virtual force

- With the inclusion of the inertial vector, the system of forces acting on the particle is equivalent to zero. The particle is in *dynamic equilibrium*.
- Methods developed for particles in static equilibrium may be applied, e.g., coplanar forces may be represented with a closed vector polygon.

Summary on Newton's 2nd law

- Two expressions
  Constant mass: **F**=m**a**; General form: $\mathbf{F} = \frac{d(m\mathbf{v})}{dt} = m\frac{d\mathbf{v}}{dt} + \mathbf{v}\frac{dm}{dt}$

  Force to induce mass change

  Force to induce velocity change

- In Coordinates
  The components of force vectors can be fully determined by the associate components of acceleration vectors through Newton's law.

- Converting dynamic problem to static problem:
  Only by **Inertial force** (a virtual force opposite to accelerations)

- Physical meaning:
  Force is the key to change motion.

Steps to solve dynamic problems though Newton's 2nd law

- Step 1: How many particles?
- Step 2: Setup coordinates
- Step 3: Determination of motion for each particles
  - 3.1, Kinematics
  - 3.2, Decomposition of forces on each particle along each axis of coordinates
  - 3.3, Dynamic equations for each particle along each axis of coordinates
- Step 4: Look up the solutions from the above determined motions.

Sample Problem 12.1

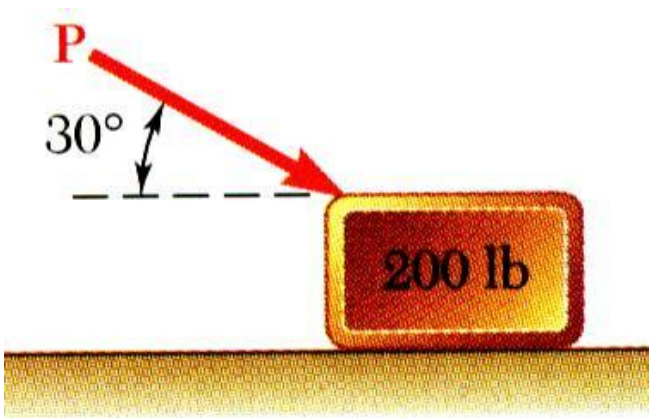

A 200-lb block rests on a horizontal plane. Find the magnitude of the force ***P*** required to give the block an acceleration or 10 ft/s^2 to the right. The coefficient of kinetic friction between the block and plane is $\mu_k = 0.25$.

SOLUTION:

- Resolve the equation of motion for the block into two rectangular component equations.
- Unknowns consist of the applied force ***P*** and the normal reaction ***N*** from the plane. The two equations may be solved for these unknowns.

Sample Problem 12.1

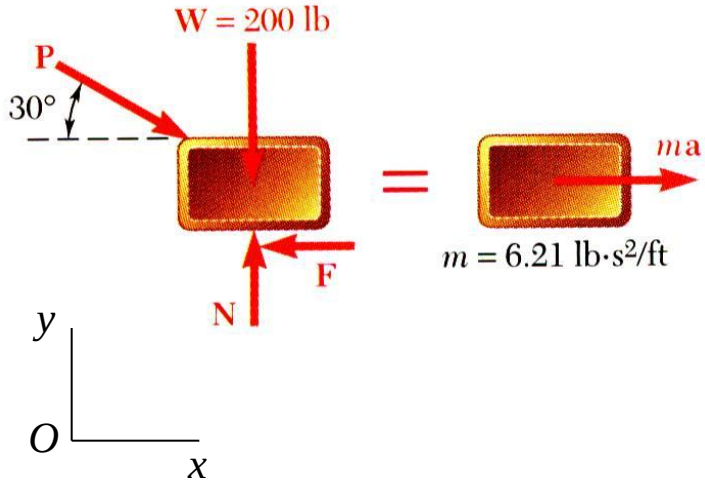

$$m = \frac{W}{g} = \frac{200\,\text{lb}}{32.2\,\text{ft}/\text{s}^2}$$

$$= 6.21\frac{\text{lb}\cdot\text{s}^2}{\text{ft}}$$

$$F = \mu_k N$$

$$= 0.25N$$

SOLUTION:

- Resolve the equation of motion for the block into two rectangular component equations.

$$\sum F_x = ma:$$

$$P\cos 30° - 0.25N = \left(6.21\,\text{lb}\cdot\text{s}^2/\text{ft}\right)\left(10\,\text{ft}/\text{s}^2\right)$$

$$= 62.1\,\text{lb}$$

$$\sum F_y = 0:$$

$$N - P\sin 30° - 200\,\text{lb} = 0$$

- Unknowns consist of the applied force ***P*** and the normal reaction ***N*** from the plane. The two equations may be solved for these unknowns.

$$N = P\sin 30° + 200\,\text{lb}$$

$$P\cos 30° - 0.25\left(P\sin 30° + 200\,\text{lb}\right) = 62.1\,\text{lb}$$

$$\boxed{P = 151\,\text{lb}}$$

Sample Problem 12.3

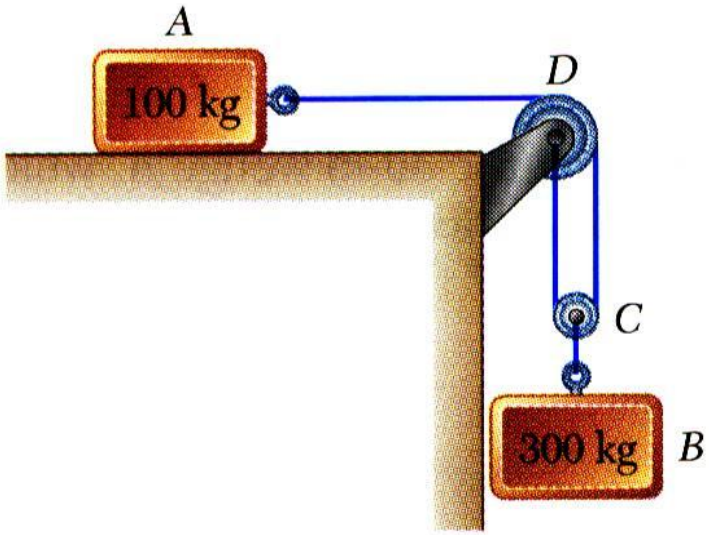

The two blocks shown start from rest. The horizontal plane and the pulley are frictionless, and the pulley is assumed to be of negligible mass. Determine the acceleration of each block and the tension in the cord.

SOLUTION:

- Write the kinematic relationships for the dependent motions and accelerations of the blocks.
- Write the equations of motion for the blocks and pulley.
- Combine the kinematic relationships with the equations of motion to solve for the accelerations and cord tension.

Sample Problem 12.3

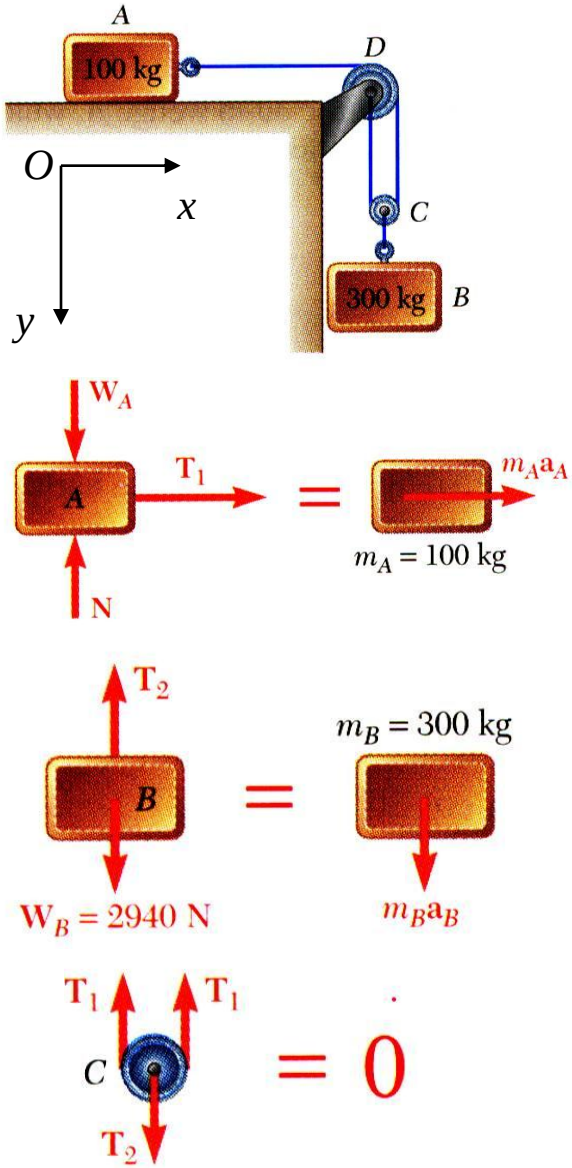

SOLUTION:

- Write the kinematic relationships for the dependent motions and accelerations of the blocks.

$$y_B = \tfrac{1}{2} x_A \qquad a_B = \tfrac{1}{2} a_A$$

- Write equations of motion for blocks and pulley.

$$\sum F_x = m_A a_A :$$

$$T_1 = (100\,\text{kg}) a_A$$

$$\sum F_y = m_B a_B :$$

$$m_B g - T_2 = m_B a_B$$

$$(300\,\text{kg})(9.81\,\text{m/s}^2) - T_2 = (300\,\text{kg}) a_B$$

$$T_2 = 2940\,\text{N} - (300\,\text{kg}) a_B$$

$$\sum F_y = m_C a_C = 0 :$$

$$T_2 - 2T_1 = 0$$

Sample Problem 12.3

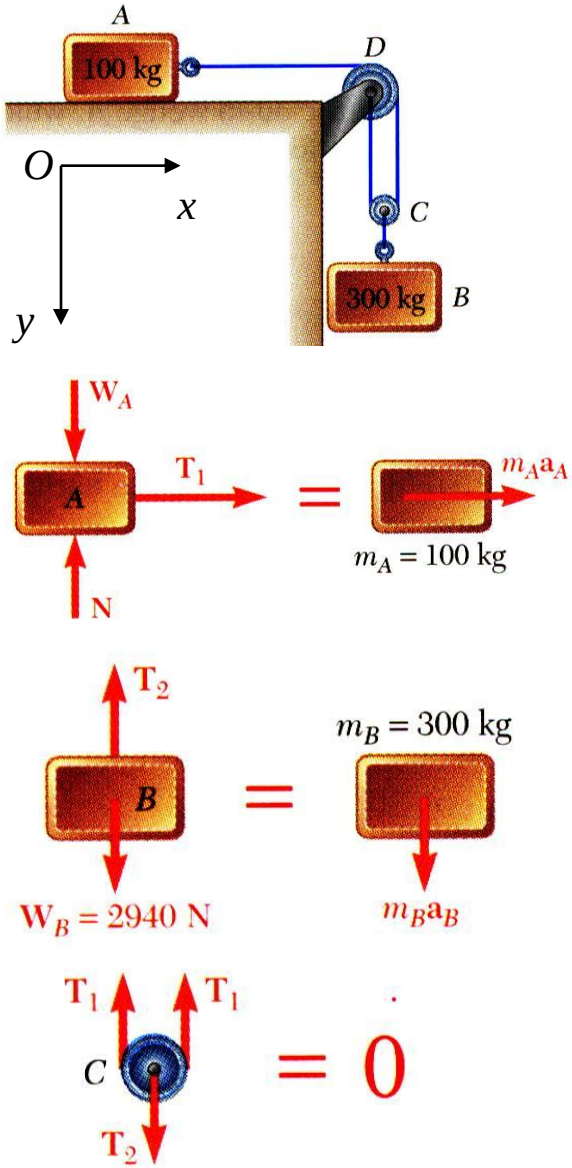

- Combine kinematic relationships with equations of motion to solve for accelerations and cord tension.

$$y_B = \tfrac{1}{2} x_A \qquad a_B = \tfrac{1}{2} a_A$$

$$T_1 = (100\,\text{kg})a_A$$

$$T_2 = 2940\,\text{N} - (300\,\text{kg})a_B$$

$$= 2940\,\text{N} - (300\,\text{kg})\left(\tfrac{1}{2} a_A\right)$$

$$T_2 - 2T_1 = 0$$

$$2940\,\text{N} - (150\,\text{kg})a_A - 2(100\,\text{kg})a_A = 0$$

$$a_A = 8.40\,\text{m/s}^2$$

$$a_B = \tfrac{1}{2} a_A = 4.20\,\text{m/s}^2$$

$$T_1 = (100\,\text{kg})a_A = 840\,\text{N}$$

$$T_2 = 2T_1 = 1680\,\text{N}$$

Sample Problem 12.4

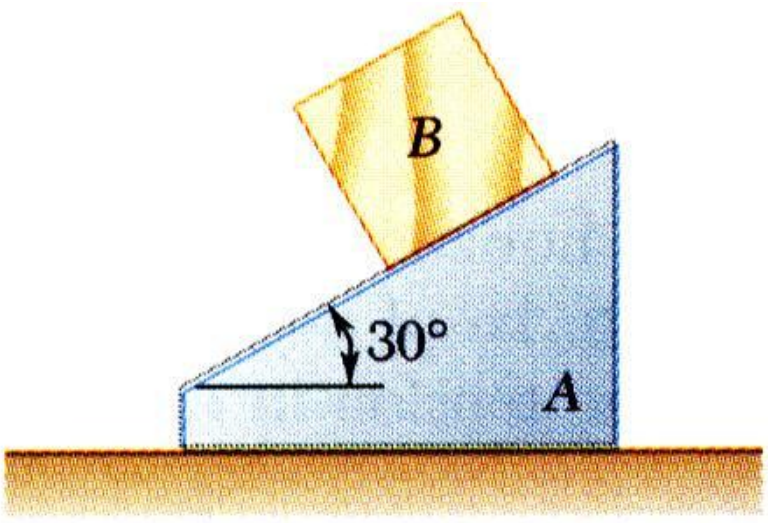

The 12-lb block *B* starts from rest and slides on the 30-lb wedge *A*, which is supported by a horizontal surface.

Neglecting friction, determine *(a)* the acceleration of the wedge, and *(b)* the acceleration of the block relative to the wedge.

SOLUTION:

- The block is constrained to slide down the wedge. Therefore, their motions are dependent. Express the acceleration of block as the acceleration of wedge plus the acceleration of the block relative to the wedge.
- Write the equations of motion for the wedge and block.
- Solve for the accelerations.

Sample Problem 12.4

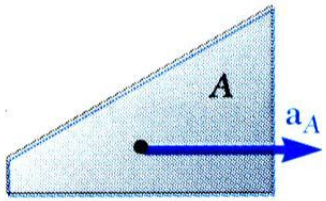

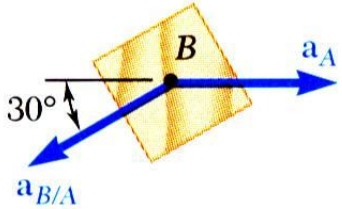

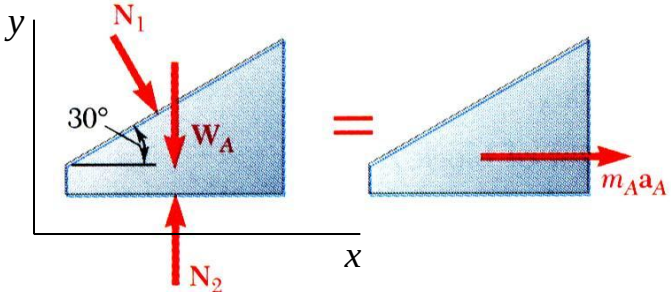

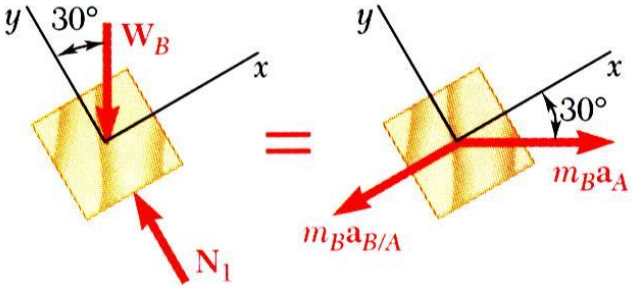

SOLUTION:

- The block is constrained to slide down the wedge. Therefore, their motions are dependent.

$$\vec{a}_B = \vec{a}_A + \vec{a}_{B/A}$$

- Write equations of motion for wedge and block.

$$\sum F_x = m_A a_A :$$

$$N_1 \sin 30° = m_A a_A$$

$$0.5 N_1 = (W_A / g) a_A$$

$$\sum F_x = m_B a_x = m_B (a_A \cos 30° - a_{B/A}):$$

$$-W_B \sin 30° = (W_B / g)(a_A \cos 30° - a_{B/A})$$

$$a_{B/A} = a_A \cos 30° + g \sin 30°$$

$$\sum F_y = m_B a_y = m_B (-a_A \sin 30°):$$

$$N_1 - W_B \cos 30° = -(W_B / g) a_A \sin 30°$$

Sample Problem 12.4

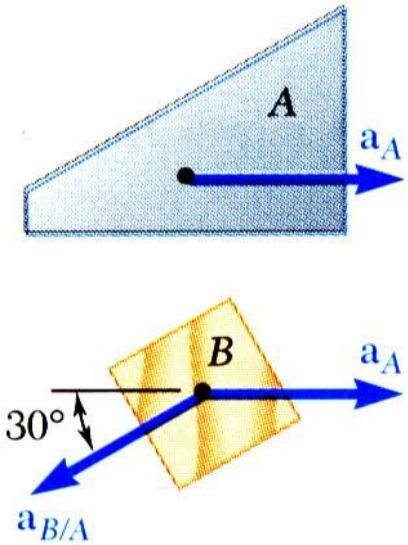

- Solve for the accelerations.

$$0.5N_1 = (W_A/g)a_A$$

$$N_1 - W_B\cos 30° = -(W_B/g)a_A \sin 30°$$

$$2(W_A/g)a_A - W_B\cos 30° = -(W_B/g)a_A \sin 30°$$

$$a_A = \frac{gW_B\cos 30°}{2W_A + W_B\sin 30°}$$

$$a_A = \frac{(32.2\,\text{ft/s}^2)(12\,\text{lb})\cos 30°}{2(30\,\text{lb}) + (12\,\text{lb})\sin 30°}$$

$$\boxed{a_A = 5.07\,\text{ft/s}^2}$$

$$a_{B/A} = a_A\cos 30° + g\sin 30°$$

$$a_{B/A} = (5.07\,\text{ft/s}^2)\cos 30° + (32.2\,\text{ft/s}^2)\sin 30°$$

$$\boxed{a_{B/A} = 20.5\,\text{ft/s}^2}$$

Sample Problem 12.5

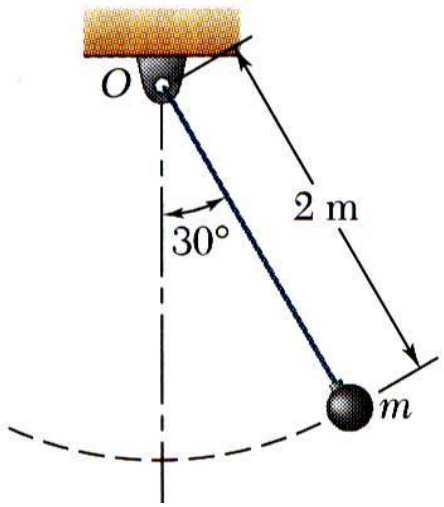

The bob of a 2-m pendulum describes an arc of a circle in a vertical plane. If the tension in the cord is 2.5 times the weight of the bob for the position shown, find the velocity and acceleration of the bob in that position.

SOLUTION:

- Resolve the equation of motion for the bob into tangential and normal components.
- Solve the component equations for the normal and tangential accelerations.
- Solve for the velocity in terms of the normal acceleration.

Sample Problem 12.5

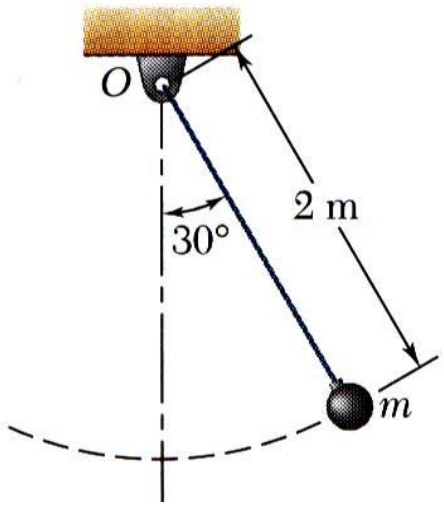

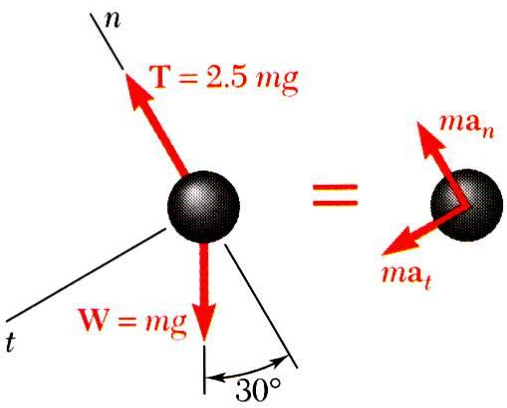

SOLUTION:

- Resolve the equation of motion for the bob into tangential and normal components.
- Solve the component equations for the normal and tangential accelerations.

$$\sum F_t = ma_t : \qquad mg\sin 30° = ma_t$$

$$a_t = g\sin 30°$$

$$\boxed{a_t = 4.9\,\mathrm{m/s^2}}$$

$$\sum F_n = ma_n : \qquad 2.5mg - mg\cos 30° = ma_n$$

$$a_n = g(2.5 - \cos 30°)$$

$$\boxed{a_n = 16.03\,\mathrm{m/s^2}}$$

- Solve for velocity in terms of normal acceleration.

$$a_n = \frac{v^2}{\rho} \qquad v = \sqrt{\rho a_n} = \sqrt{(2\,\mathrm{m})(16.03\,\mathrm{m/s^2})}$$

$$\boxed{v = \pm 5.66\,\mathrm{m/s}}$$

Sample Problem 12.6

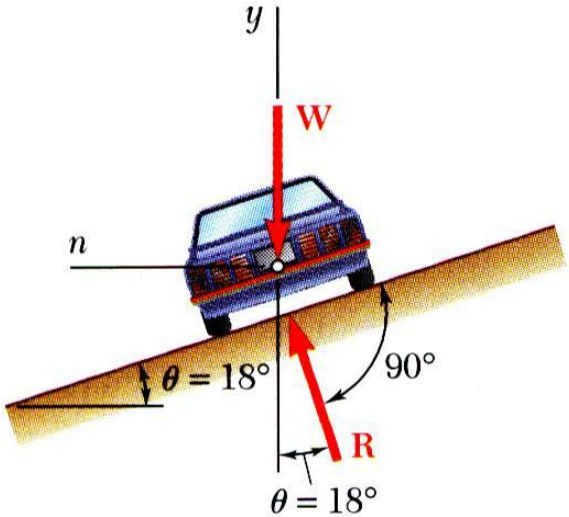

Determine the rated speed of a highway curve of radius $\rho = 400$ ft banked through an angle $\theta = 18^{o}$. The rated speed of a banked highway curve is the speed at which a car should travel if no lateral friction force is to be exerted at its wheels.

SOLUTION:

- The car travels in a horizontal circular path with a normal component of acceleration directed toward the center of the path.The forces acting on the car are its weight and a normal reaction from the road surface.
- Resolve the equation of motion for the car into vertical and normal components.
- Solve for the vehicle speed.

Sample Problem 12.6

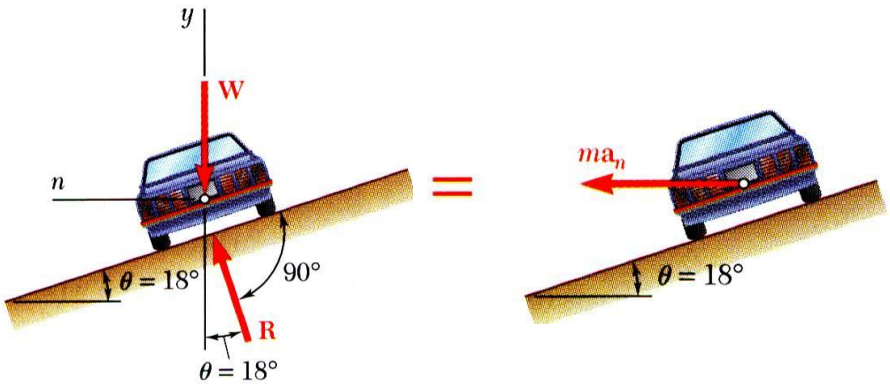

SOLUTION:

- The car travels in a horizontal circular path with a normal component of acceleration directed toward the center of the path.The forces acting on the car are its weight and a normal reaction from the road surface.

- Resolve the equation of motion for the car into vertical and normal components.

$$\sum F_y = 0: \qquad R\cos\theta - W = 0$$

$$R = \frac{W}{\cos\theta}$$

$$\sum F_n = ma_n: \qquad R\sin\theta = \frac{W}{g}a_n$$

$$\frac{W}{\cos\theta}\sin\theta = \frac{W}{g}\frac{v^2}{\rho}$$

- Solve for the vehicle speed.

$$v^2 = g\rho\tan\theta$$

$$= \left(32.2\,\text{ft/s}^2\right)\left(400\,\text{ft}\right)\tan 18°$$

$$\boxed{v = 64.7\,\text{ft/s} = 44.1\,\text{mi/h}}$$

Sample Problem 12.15

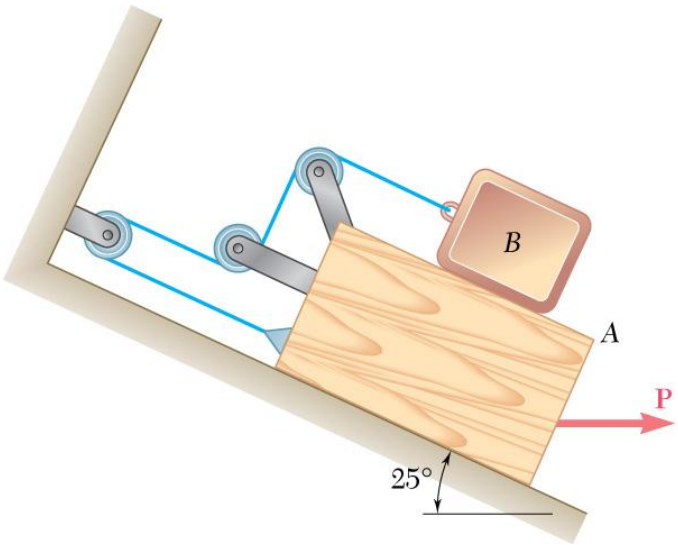

Block A weights 80lb, and block B weights 16lb. The coefficients of friction between all surfaces of contact are u_s=0.2 and u_k=0.15. Knowing that P=0, determine (a) the acceleration of block B, (b) the tension in the cord.

Sample Problem 12.40

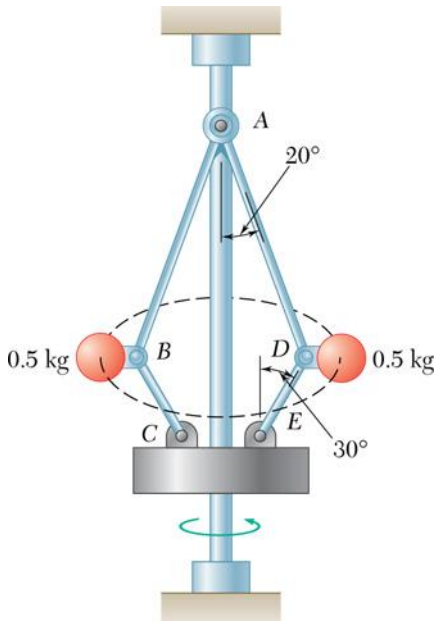

The 0.5kg flyballs of a centrifugal governor revolve at a constant speed *v* in the horizontal circle of 150mm radius shown. Neglecting the mass of links AB,BC,AD, and DE and requiring that the links support only tensile forces, determine the range of the allowable values of v so that the magnetitudes of the forces in the links do not exceed 75N