HW 4, EE 420 Digital Filters
California State University, Fullerton
Spring 2010

Nasser M. Abbasi

Spring 2010 Compiled on May 12, 2019 at 4:26pm

Contents

1 Problem 1 (chapter 2, 2, page 78)

2. Determine the z-transform of each of the following. Include with your answer the region of convergence in the z-plane and a sketch of the pole–zero pattern. Express all sums in closed form. α can be complex.

(a) $x(n) = \alpha^{|n|}$, $0 < |\alpha| < 1$.

(b) $x(n) = Ar^n \cos(\omega_0 n + \phi)u(n)$, $0 < r < 1$.

(c) $x(n) = \begin{cases} 1, & 0 \le n \le N-1, \\ 0, & N \le n, \\ 0, & n < 0. \end{cases}$

(d) $x(n) = \begin{cases} n, & 0 \le n \le N, \\ 2N - n, & N+1 \le n \le 2N, \\ 0, & 2N \le n, \\ 0, & 0 > n. \end{cases}$

[*Hint* (easy way): First express $x(n)$ in terms of the $x(n)$ in part (c).]

Part (a)

$$x(n) = \alpha^{|n|}, \qquad 0 < |\alpha| < 1$$

When $n < 0$, then $x(n) = \alpha^{-n}$ and when $n \ge 0$, then $x(n) = \alpha^n$, hence we split the sum

$$\begin{aligned}
X(z) &= \sum_{n=-\infty}^{\infty} x(n) z^{-n} \\
&= \sum_{n=-\infty}^{-1} \alpha^{-n} z^{-n} + \sum_{n=0}^{\infty} \alpha^n z^{-n} \\
&= \sum_{1}^{\infty} \alpha^n z^n + \sum_{n=0}^{\infty} \alpha^n z^{-n} \\
&= -1 + \sum_{0}^{\infty} \alpha^n z^n + \sum_{n=0}^{\infty} \alpha^n z^{-n} \\
&= -1 + \sum_{0}^{\infty} (\alpha z)^n + \sum_{n=0}^{\infty} \left(\frac{\alpha}{z}\right)^n \\
&= -1 + \frac{1}{1-\alpha z} + \frac{1}{1-\alpha z^{-1}} \qquad (1)
\end{aligned}$$

Where for the first sum $\sum_{0}^{\infty} (\alpha z)^n$, we need $|\alpha z| < 1$ or $|z| < \left|\frac{1}{\alpha}\right|$ for convergence, and for the second sum $\sum_{n=0}^{\infty} \left(\frac{\alpha}{z}\right)^n$, we need $\left|\frac{\alpha}{z}\right| < 1$ for convergence, or $|z| > |\alpha|$ Hence, since $0 < |\alpha| < 1$, we have the ROC as

$$|\alpha| < |z| < \left|\frac{1}{\alpha}\right|$$

To help see where the poles and zeros are, expression (1) is simplfied to

$$X(z) = \frac{z\left(1-\alpha^2\right)}{(1-\alpha z)(z-\alpha)}$$

We now see that a pole exist at $z = \frac{1}{\alpha}$ and at $z = \alpha$ and a zero at $z = 0$

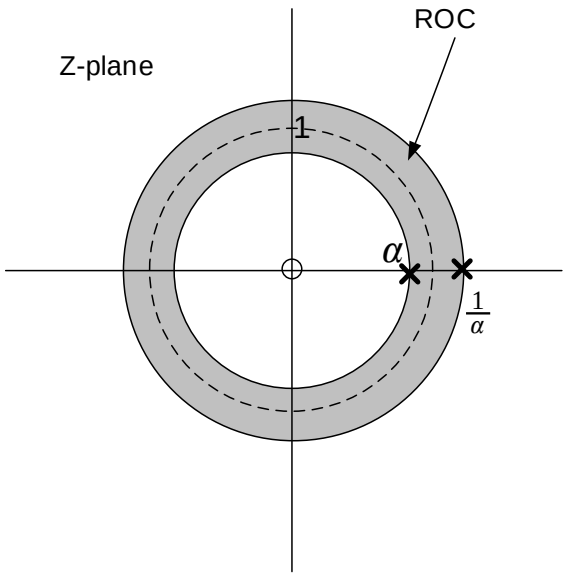

Part (2)

$$x(n) = Ar^n \cos(\omega_0 n + \phi)\, u(n), \qquad 0 < r < 1$$

$$\begin{aligned}
\mathfrak{I}(x(n)) = X(z) &= \sum_{n=-\infty}^{\infty} x(n) z^{-n} \\
&= \sum_{n=0}^{\infty} Ar^n \cos(\omega_0 n + \phi) z^{-n} \\
&= \frac{A}{2} \sum_{n=0}^{\infty} r^n \left(e^{i(\omega_0 n + \phi)} + e^{-i(\omega_0 n + \phi)} \right) z^{-n} \\
&= \frac{A}{2} \sum_{n=0}^{\infty} r^n \left(e^{i\omega_0 n} e^{i\phi} + e^{-i\omega_0 n} e^{-i\phi} \right) z^{-n} \\
&= \frac{A}{2} \sum_{n=0}^{\infty} r^n e^{i\omega_0 n} e^{i\phi} z^{-n} + \frac{A}{2} \sum_{n=0}^{\infty} r^n e^{-i\omega_0 n} e^{-i\phi} z^{-n} \\
&= \frac{A}{2} e^{i\phi} \sum_{n=0}^{\infty} \left(\frac{re^{i\omega_0}}{z} \right)^n + \frac{A}{2} e^{-i\phi} \sum_{n=0}^{\infty} \left(\frac{r}{e^{i\omega_0} z} \right)^n \\
&= \frac{A}{2} e^{i\phi} \frac{1}{1 - re^{i\omega_0} z^{-1}} + \frac{A}{2} e^{-i\phi} \frac{1}{1 - r\left(e^{i\omega_0} z\right)^{-1}}
\end{aligned}$$

Where the first sum $\sum_{n=0}^{\infty} \left(\frac{re^{i\omega_0}}{z} \right)^n$ requires that $\left| \frac{re^{i\omega_0}}{z} \right| < 1$ or $|z| > r$ (since $\left| e^{i\omega_0} \right| = 1$), and the second sum $\sum_{n=0}^{\infty} \left(\frac{r}{e^{i\omega_0} z} \right)^n$ requires that $\left| \frac{r}{e^{i\omega_0} z} \right| < 1$ or $|z| > |r|$, hence the ROC is $|z| > |r|$, and since $|r| < 1$, then the ROC contains the unit circle, i.e. the sequence $x(n)$ has a DTFT transform as well (it is BIBO stable).

To find poles and zeros: Since the ROC is surrounded by poles, we conclude that $z = r$ is a pole, and since this is a causal signal, the zero is at $z = \infty$

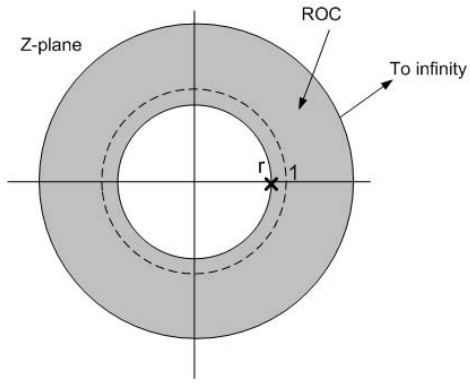

Part(3)

$$x(n) = \begin{cases} 1 & 0 \leq n \leq N-1 \\ 0 & N \leq n \\ 0 & n < 0 \end{cases}$$

$$\begin{aligned} X(z) &= \sum_{n=0}^{N-1} z^{-n} \\ &= \frac{1 - z^{-N}}{1 - z^{-1}} \end{aligned}$$

Where the only condition is that $\left|\frac{1}{z^n}\right| < \infty$ for any n in the above range. Since $n \geq 0$, then this implies that $z \neq 0$

Hence the ROC is the complete z plane, except for $z = 0$

To find poles and zero, easier to rewrite $X(z)$ in powers of z

$$X(z) = \frac{z^N - 1}{z^N - z^{N-1}} = \frac{z^N - 1}{z^{N-1}(z-1)}$$

So we have N zeros around the unit circle (roots of unity) and one pole at $z = 1$ and $N - 1$ poles at $z = 0$. notice pole at $z = 1$ would cancel the zero at $z = 0$

part (4)

$$x(n) = \begin{cases} 1 & 0 \leq n \leq N \\ 2N - n & N + 1 \leq n \leq 2N \\ 0 & 2N \leq 0 \\ 0 & 0 > n \end{cases}$$

$$
\begin{aligned}
X(z) &= \sum_{n=0}^{N} z^{-n} + \sum_{n=N+1}^{2N} (2N-n) z^{-n} \\
&= \sum_{n=0}^{N} z^{-n} + 2N \sum_{n=N+1}^{2N} z^{-n} - \sum_{n=N+1}^{2N} n z^{-n} \\
&= \sum_{n=0}^{N} z^{-n} + 2N \left(\sum_{n=0}^{2N} z^{-n} - \sum_{n=0}^{N} z^{-n} \right) - \left(\sum_{n=0}^{2N} n z^{-n} - \sum_{n=0}^{N} n z^{-n} \right) \\
&= \frac{1-z^{-(N+1)}}{1-z} + 2N \left(\frac{1-z^{-(2N+1)}}{1-z^{-1}} - \frac{1-z^{-(N+1)}}{1-z^{-1}} \right) - \sum_{n=0}^{2N} n z^{-n} + \sum_{n=0}^{N} n z^{-n} \qquad (1)
\end{aligned}
$$

To find $\sum_{n=0}^{2N} n z^{-n}$, I will use the relation that if the z-transform of $x(n)$ is $X(z)$, then the z-transform of $nx(n)$ is $-zX'(z)$. Hence, let

$$
x(n) = \begin{cases} 1 & 0 \le n \le 2N \\ 0 & N \le n \\ 0 & n < 0 \end{cases}
$$

Then

$$
\begin{aligned}
X(z) &= \sum_{n=0}^{2N} z^{-n} \\
&= \frac{1-\left(z^{-1}\right)^{2N+1}}{1-z^{-1}} = \frac{1-z^{-2N-1}}{1-z^{-1}}
\end{aligned}
$$

Hence

$$
\begin{aligned}
-zX'(z) &= -z \frac{d}{dz} \left(\frac{1-z^{-2N-1}}{1-z^{-1}} \right) \\
&= -z \left[\frac{-(-2N-1) z^{-2N-2}}{(1-z^{-1})} - \frac{\left(1-z^{-2N-1}\right)}{\left(1-z^{-1}\right)^2 z^2} \right] \\
&= \left[\frac{z^{-2N} \left(-2N(z-1) + z\left(z^{2N}-1\right)\right)}{(z-1)^2} \right]
\end{aligned}
$$

Hence

$$
\sum_{n=0}^{2N} n z^{-n} = \left[\frac{z^{-2N} \left(-2N(z-1) + z\left(z^{2N}-1\right)\right)}{(z-1)^2} \right]
$$

Similarly, for $\sum_{n=0}^{N} n z^{-n}$, Let

$$
x(n) = \begin{cases} 1 & 0 \le n \le N \\ 0 & N \le n \\ 0 & n < 0 \end{cases}
$$

then

$$
\begin{aligned}
X(z) &= \sum_{n=0}^{N} z^{-n} \\
&= \frac{1-\left(z^{-1}\right)^{N+1}}{1-z^{-1}} = \frac{1-z^{-N-1}}{1-z^{-1}}
\end{aligned}
$$

Hence

$$\begin{aligned}-zX'(z) &= -z\frac{d}{dz}\left(\frac{1-z^{-N-1}}{1-z^{-1}}\right)\\ &= \frac{z^{-N}\left(N-Nz+z\left(z^{N}-1\right)\right)}{(z-1)^{2}}\end{aligned}$$

Therefore

$$\sum_{n=0}^{N} nz^{-n} = \frac{z^{-N}\left(N-Nz+z\left(z^{N}-1\right)\right)}{(z-1)^{2}}$$

Going back to (1) and substitute the above results, we obtain

$$\begin{aligned}X(z) &= \frac{1-z^{-(N+1)}}{1-z} + 2N\left(\frac{1-z^{-(2N+1)}}{1-z^{-1}} - \frac{1-z^{-(N+1)}}{1-z^{-1}}\right) - \sum_{n=0}^{2N} nz^{-n} + \sum_{n=0}^{N} nz^{-n}\\ &= \frac{1-z^{-(N+1)}}{1-z} + 2N\left(\frac{1-z^{-(2N+1)}}{1-z^{-1}} - \frac{1-z^{-(N+1)}}{1-z^{-1}}\right)\\ &\quad - \left[\frac{z^{-2N}\left(-2N(z-1)+z\left(z^{2N}-1\right)\right)}{(z-1)^{2}}\right]\\ &\quad + \frac{z^{-N}\left(N-Nz+z\left(z^{N}-1\right)\right)}{(z-1)^{2}}\end{aligned}$$

This can be simplified little more to be

$$\begin{aligned}X(z) &= \frac{1-z^{-(N+1)}}{1-z} + 2N\left(\frac{1-z^{-(2N+1)}}{1-z^{-1}} - \frac{1-z^{-(N+1)}}{1-z^{-1}}\right)\\ &\quad + \frac{-z^{-2N}\left(-2N(z-1)+z\left(z^{2N}-1\right)\right) + z^{-N}\left(N-Nz+z\left(z^{N}-1\right)\right)}{(z-1)^{2}}\end{aligned}$$

That is as closed form as I can get it to be.

Since this is finite sequence, and $n > 0$, then the sum converges as long as $z \neq 0$. Hence the ROC is all the z-plane except for $z = 0$.

To find poles and zero, easier to rewrite $X(z)$ in powers of z, but too complicated to do. I think my solution here is not what I should have done, but I am not sure now what else to do.

2 Problem 2 (problem 7 in text book, chapter 2, page 79)

Determine whether or not the function $F(z) = z^{*}$ can correspond to the z transform of a sequence.

Answer:

I assume we are only to consider a real sequence $x(n)$ and not complex sequence.

Consider z at the unit circle, hence $z = e^{j\omega}$, therefore $z^{*} = e^{-j\omega} = z^{-1}$, So, we want to find a sequence $x(n)$, such that

$$\sum_{n} x(n) z^{-n} = z^{-1}$$

But if $x(n) = \delta(n-1)$, then

$$\sum_{n} \delta(n-1) z^{-n} = \sum_{n} \delta(n-1) z^{-1} = z^{-1}\sum_{n} \delta(n-1) = z^{-1}$$

Hence, we found such a sequence.

3 Problem (3) (problem 10, chapter 2, page 80)

Show that if $X(z)$ is the z transform of a sequence $x(n)$, then

(a) $z^{n_0}X(z)$ is the z-transform of $x(n+n_0)$

(b) $X\left(a^{-1}z\right)$ is the z-transform of $a^n x(n)$

(c)$-zX'(z)$ is the z-transform of $nx(n)$

Part(a)

$$\begin{aligned}\mathfrak{I}(x(n)) = X(z) &= \sum_n x(n) z^{-n}\\ z^{n_0}X(z) = z^{n_0}\sum_{n=-\infty}^{\infty} x(n) z^{-n} &= \sum_{n=-\infty}^{\infty} x(n) z^{-n+n_0}\end{aligned}$$

Let $m = n - n_0$, hence $n = m + n_0$ and when $n = -\infty$, $= -\infty$, and then $n = \infty$, $m = \infty$, then the above becomes

$$z^{n_0}X(z) = \sum_{m=-\infty}^{\infty} x(m+n_0) z^{-m}$$

But m is a dummy variable, rename it back to n, we have

$$z^{n_0}X(z) = \sum_{n=-\infty}^{\infty} x(n+n_0) z^{-n}$$

But RHS above is just the z-transform of $x(n+n_0)$. QED Part(b)

$$\begin{aligned}\mathfrak{I}(x(n)) = X(z) &= \sum_n x(n) z^{-n}\\ X\left(\frac{z}{a}\right) &= \sum_{n=-\infty}^{\infty} x(n)\left(\frac{z}{a}\right)^{-n}\\ &= \sum_{n=-\infty}^{\infty} x(n) a^n z^{-n}\\ &= \sum_{n=-\infty}^{\infty} \left[a^n x(n)\right] z^{-n}\end{aligned}$$

Hence, RHS is $\mathfrak{I}(a^n x(n))$, hence

$$\mathfrak{I}(a^n x(n)) = X\left(\frac{z}{a}\right)$$

Part(c)

$$\begin{aligned}\mathfrak{I}(x(n)) = X(z) &= \sum_n x(n) z^{-n}\\ X'(z) &= \sum_n x(n)\left(-nz^{-n-1}\right)\\ &= -\sum_n x(n) n\frac{z^{-n}}{z}\\ &= -\frac{1}{z}\sum_n \left[nx(n)\right] z^{-n}\end{aligned}$$

Hence

$$-zX'(z) = \sum_n [nx(n)] z^{-n}$$

Therefore

$$\mathfrak{I}(nx(n)) = -zX'(z)$$

QED

4 Problem (4) (Problem 11, chapter 2, page 80)

→ **11.** With $X(z)$ denoting the z-transform of $x(n)$, show that

$$\mathfrak{Z}[x^*(n)] = X^*(z^*).$$

$$\mathfrak{Z}[x(-n)] = X\left(\frac{1}{z}\right).$$

$$\mathfrak{Z}[\text{Re } x(n)] = \tfrac{1}{2}[X(z) + X^*(z^*)].$$

$$\mathfrak{Z}[\text{Im } x(n)] = \frac{1}{2j}[X(z) - X^*(z^*)].$$

part (1) show that $\mathfrak{I}(x^*(n)) = X^*(z^*)$. By definition,

$$\mathfrak{I}(x(n)) = X(z) = \sum_n x(n) z^{-n}$$

For the sequence $x^*(n)$

$$\mathfrak{I}(x^*(n)) = \sum_n x^*(n) z^{-n} \tag{1}$$

But

$$\begin{aligned} X^*(z^*) &= \left(\sum_n x(n)(z^*)^{-n}\right)^* \\ &= \left(\sum_n x(n)(z^{-n})^*\right)^* \end{aligned}$$

Move the outside conjugate operation to inside the sum results in

$$\begin{aligned} X^*(z^*) &= \sum_n x^*(n)\left((z^{-n})^*\right)^* \\ &= \sum_n x^*(n) z^{-n} \end{aligned} \tag{2}$$

Compare (1) and (2), they are the same. Hence $\mathfrak{I}(x^*(n)) = X^*(z^*)$ Part (2)

Show that $\mathfrak{I}(x(-n)) = X\left(\frac{1}{z}\right)$

By definition,

$$\mathfrak{I}\left(x\left(n\right)\right)=X\left(z\right)=\sum_{n}x\left(n\right)z^{-n} \tag{1}$$

For the sequence $x\left(-n\right)$, we have

$$\mathfrak{I}\left(x\left(-n\right)\right)=\sum_{n}x\left(-n\right)z^{-n}$$

Let $m=-n$, hence when $n=-\infty$, $m=\infty$, and when $n=\infty$, $m=\infty$, so the above becomes

$$\mathfrak{I}\left(x\left(-n\right)\right)=\sum_{m=\infty}^{-\infty}x\left(m\right)z^{m}$$

But m is a dummy variable, hence rename to n, we have

$$\mathfrak{I}\left(x\left(-n\right)\right)=\sum_{n=-\infty}^{\infty}x\left(n\right)z^{n} \tag{2}$$

Now, in (1), Let $z=\frac{1}{z}$on both sides, we obtain

$$\begin{aligned}X\left(\frac{1}{z}\right)&=\sum_{n}x\left(n\right)\left(\frac{1}{z}\right)^{-n}\\&=\sum_{n=-\infty}^{\infty}x\left(n\right)z^{n}\end{aligned} \tag{3}$$

Compare (2) and (3), we see they are the same, hence

$$\mathfrak{I}\left(x\left(-n\right)\right)=X\left(\frac{1}{z}\right)$$

Part (3)

Show that $\mathfrak{I}\left(\operatorname{Re}\left[x\left(n\right)\right]\right)=\frac{1}{2}\left[X\left(z\right)+X^{*}\left(z^{*}\right)\right]$

By definition,

$$\mathfrak{I}\left(x\left(n\right)\right)=X\left(z\right)=\sum_{n}x\left(n\right)z^{-n}$$

Let

$$x\left(n\right)=\operatorname{Re}\left(x\left(n\right)\right)+j\operatorname{Im}\left(x(n)\right)$$

Now

$$X^{*}\left(z\right)=\left(\sum_{n}x\left(n\right)z^{-n}\right)^{*}=\sum_{n}x^{*}\left(n\right)\left(z^{-n}\right)^{*}$$

Then

$$X^{*}\left(z^{*}\right)=\sum_{n}x^{*}\left(n\right)z^{-n}$$

Hence

$$\begin{aligned}X\left(z\right)+X^{*}\left(z^{*}\right)&=\sum_{n}x\left(n\right)z^{-n}+\sum_{n}x^{*}\left(n\right)z^{-n}\\&=\sum_{n}\left[x\left(n\right)+x^{*}\left(n\right)\right]z^{-n}\\&=\sum_{n}\left[\operatorname{Re}\left(x\left(n\right)\right)+j\operatorname{Im}\left(x(n)\right)+\operatorname{Re}\left(x\left(n\right)\right)-j\operatorname{Im}\left(x(n)\right)\right]z^{-n}\\&=\sum_{n}2\operatorname{Re}\left(x\left(n\right)\right)\ z^{-n}\end{aligned}$$

Hence

$$\frac{1}{2}\left(X(z)+X^{*}(z^{*})\right)=\sum_{n}\operatorname{Re}(x(n))\ z^{-n}$$

But RHS above is $\mathfrak{I}(\operatorname{Re}(x(n)))$, hence

$$\mathfrak{I}(\operatorname{Re}(x(n)))=\frac{1}{2}\left(X(z)+X^{*}(z^{*})\right)$$

Part (4)

Show that $\mathfrak{I}(\operatorname{Im}[x(n)])=\frac{1}{2j}\left[X(z)-X^{*}(z^{*})\right]$

By definition,

$$\mathfrak{I}(x(n))=X(z)=\sum_{n}x(n)\,z^{-n}$$

Let

$$x(n)=\operatorname{Re}(x(n))+j\operatorname{Im}(x(n))$$

Hence

$$\begin{aligned}X(z)-X^{*}(z^{*})&=\sum_{n}x(n)\,z^{-n}-\sum_{n}x^{*}(n)\,z^{-n}\\&=\sum_{n}\left(x(n)-x^{*}(n)\right)z^{-n}\\&=\sum_{n}\left(\operatorname{Re}(x(n))+j\operatorname{Im}(x(n))-\left[\operatorname{Re}(x(n))-j\operatorname{Im}(x(n))\right]\right)z^{-n}\\&=\sum_{n}2j\operatorname{Im}(x(n))\,z^{-n}\end{aligned}$$

Hence

$$\frac{1}{2j}\left[X(z)-X^{*}(z^{*})\right]=\sum_{n}\operatorname{Im}(x(n))\ z^{-n}$$

But RHS above is $\mathfrak{I}(\operatorname{Im}(x(n)))$, hence

$$\mathfrak{I}(\operatorname{Im}(x(n)))=\frac{1}{2j}\left[X(z)-X^{*}(z^{*})\right]$$

5 Problem (5) problem 15, chapter 2, page 81

Consider a finite impulse response filter with unit-sample response $h(n)$ of length $(2N+1)$. If $h(n)$ is real and even, show that the zeros of the system function occur in mirror image pairs about the unit circle. i.e. if $H(z)=0$ for $z=\rho e^{j\theta}$ then $H(z)=0$ also for $z=\left(\frac{1}{\rho}\right)e^{j\theta}$

Answer:

Since $h(n)$ is real and even, then $\mathfrak{I}(h(n))$ is real and even. This can be seen as follows

$$\begin{aligned}\mathfrak{I}(h(n))=H(z)&=\sum_{n=-N}^{N}h(n)\,z^{-n}\\&=-h(0)+\sum_{n=-N}^{0}h(n)\,z^{-n}+\sum_{n=0}^{N}h(n)\,z^{-n}\\&=-h(0)+\sum_{n=0}^{N}h(-n)\,z^{n}+\sum_{n=0}^{N}h(n)\,z^{-n}\end{aligned}$$

Since $h(n)$ is real and even, then $h(-n) = h(n)$, so the above becomes

$$\begin{aligned} H(z) &= -h(0) + \sum_{n=0}^{N} h(n) z^{n} + \sum_{n=0}^{N} h(n) z^{-n} \\ &= -h(0) + \sum_{n=0}^{N} h(n) \left(z^{n} + z^{-n}\right) \end{aligned} \tag{1}$$

Now, let $z = \rho e^{j\theta}$, so

$$\begin{aligned} H(z) &= -h(0) + \sum_{n=0}^{N} h(n) \left(\rho e^{j\theta} + \frac{1}{\rho} e^{-j\theta}\right)^{n} \\ &= -h(0) + \sum_{n=0}^{N} h(n) \left(\rho e^{j\theta} + \frac{1}{\rho} e^{-j\theta}\right)^{n} \end{aligned} \tag{2}$$

And let $z = \frac{1}{\rho} e^{j\theta}$ again in (1), we obtain

$$\begin{aligned} H(z) &= -h(0) + \sum_{n=0}^{N} h(n) \left(\left(\frac{1}{\rho} e^{j\theta}\right)^{n} + \left(\frac{1}{\rho} e^{j\theta}\right)^{-n}\right) \\ &= -h(0) + \sum_{n=0}^{N} h(n) \left(\left(\frac{1}{\rho} e^{j\theta}\right)^{n} + \left(\rho e^{-j\theta}\right)^{n}\right) \\ &= -h(0) + \sum_{n=0}^{N} h(n) \left(\frac{1}{\rho} e^{j\theta} + \rho e^{-j\theta}\right)^{n} \end{aligned} \tag{3}$$

Compare (2) and (3), they are the same. Hence $H(z)$ is the same at $z = \frac{1}{\rho} e^{j\theta}$ and at $z = \rho e^{j\theta}$, therefore $H(z)$ is even function w.r.t. unit circle. Hence if a zero occurs outside a unit circle, there will be a mirror image of this zero inside the unit circle (since $H(z)$ will have the same value, which is zero in this case) at both location.

This problem is similar to looking at the DTFT $F\left(e^{j\omega}\right)$, which is real and even when $x(n)$ is real and even. The difference is that $F\left(e^{j\omega}\right)$ will be even about the $y - axis$ while $H(z)$ is even w.r.t. unit circle.